TD 92383GB

Installation Guide

CR2 Charging Rack for Handset

2006-08-09/ Ver. B

Contents

1 General 1

2 Safety Rules 1

3 Installation 3

3.1 Mounting 4

3.2 Removing Covers 5

3.3 Mounting Units Together 6

4 Connection of Power Supply 8

4.1 Connection of Mains Power Supply Cable (AC) 8

4.2 Wiring Run 9

4.3 Connection of Supply Voltage Connector 11

5 Installation Test 11

6 Board Description 12

7 Installation of Spare Battery Adapter 13

7.1 Installation Test 13

Document History 14

1 General

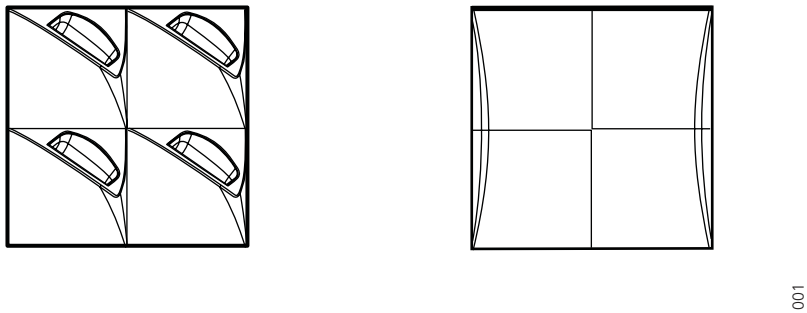

Figure 1. CR2 Charging Rack for Handsets and Power Supply for CR24.

The CR2 Charging Rack for Handsets module is part of the Ascom 9d and VoWiFi Systems. It charges both the 9d24 Cordless Handsets and i75 VoWiFi Handsets. Spare batteries for 9d24 Cordless Handsets can be charged by mounting an adapter in the charging slot while spare batteries for i75 VoWiFi Handsets require the BPC Battery Pack Charger module.

The CR2 Charging Rack module is used together with the Power Supply for CR24. Each CR2 Charging Rack Handset module charges four handsets or 9d24 batteries simultaneously, and each Power Supply for CR24 can supply three CR2 Charging Rack Handset modules with all together twelve handsets.

IMPORTANT: Power Supply for CR24 is the only power supply that can be used together with CR2 Charging Rack.

	Charging Rack for Handsets	**Power Supply for CR24**
Supply voltage:	+5 V DC	85 – 286 V AC (47-63Hz)
Max current consumption when charging:	3.2 A per module	2 A
Max output current when shortcut:	5 A per module 1.25 A per slot	12 A

Note: A label of the power rating, rated voltage, and rated current, is attached on the metal shield cover of the power supply.

2 Safety Rules

The Power Supply module connects to 85 – 286 V AC. Therefore extra caution should be taken during operation.

- For safety the covers must always be mounted during operation.
- The voltage safety cover has to be mounted on top of the voltage connector in the Power Supply module to prevent hazardous situations, like electric shock.

- Ensure that the Power Supply is grounded after installation, by measuring between the power supplies metal shield cover and an extraneous ground. The Power Supply unit can otherwise be live.
- When working with the units the mains power supply cable must always be disconnected. Note the following:
  - for PERMANENTLY CONNECTED EQUIPMENT, a readily accessible disconnect device shall be incorporated in the building installation wiring;
  - for PLUGGABLE EQUIPMENT, the socket-outlet shall be installed near the equipment and shall be easily accessible

  The disconnect device shall disconnect both poles simultaneously.

- For continued protection against risk of fire only replace the fuse in the Charging Rack with the same type and rating of fuse (5A ATAB Art. No. 210289).
- If the ambient temperature is 25° C (77° F) or lower the Power Supply CR24 can supply up to three charging racks (CR2 Charging Rack or BPC Battery Pack Charger).
- If the ambient temperature is higher than 25° C (77° F) the Power Supply CR24 can supply up to three CR2 Charging Racks or two BPC Battery Pack Chargers.

- Suomi: Laite on liitettävä suojamaadoituskoskettimilla varustettuun pistorasiaan.
- Norge: Apparatet må tillkoples jordet stikkontakt.
- Sverige: Apparaten skall anslutas till jordat uttag.

3 Installation

- The units should be placed in a dry environment with a temperature range over 0° up to + 40° C.
- If the ambient temperature is 25° C (77° F) or lower the Power Supply CR24 can supply up to three charging racks (CR2 Charging Rack or BPC Battery Pack Charger).
- If the ambient temperature is higher than 25° C (77° F) the Power Supply CR24 can supply up to three CR2 Charging Racks or two BPC Battery Pack Chargers.
- The units should be mounted vertically.
- Avoid mounting the CR2 Charging Rack module in a sunlit place. This can affect the charging capacity.
- Avoid mounting the CR2 Charging Rack module where the coverage is not sufficient. This can reduce the messaging capacity.
- The unit should be mounted on concrete or plaster walls only.
- The Power Supply CR24 should be mounted above or beside the charging modules (see figure 2 on page 4) due to the generation of heat.

Delivery includes:

1 Inlet accessory kit including;

- Cable supports and screws
- Rectangular assembly parts
- Clips

Tools etc. required:

- Three-wired cable for the mains power with diameter 4 – 8.5 mm. Make sure that the used cable is grounded and approved for the current and voltage in question.
- Screwdrivers
- Cutting pliers
- Multimeter
- Screws and wall plugs for wall mounting. Make sure the screws and wall plugs are correct for the type of wall used. See example below:

Wall material	Wall plug	Screw diameter
Single plasterboard	Thorsman TP1	3.5 – 5 mm
Double plasterboard	Thorsman TP2	3.5 – 5 mm
Concrete	Thorsman TP2	3.5 – 5 mm

Examples of the Way to Assemble the Modules

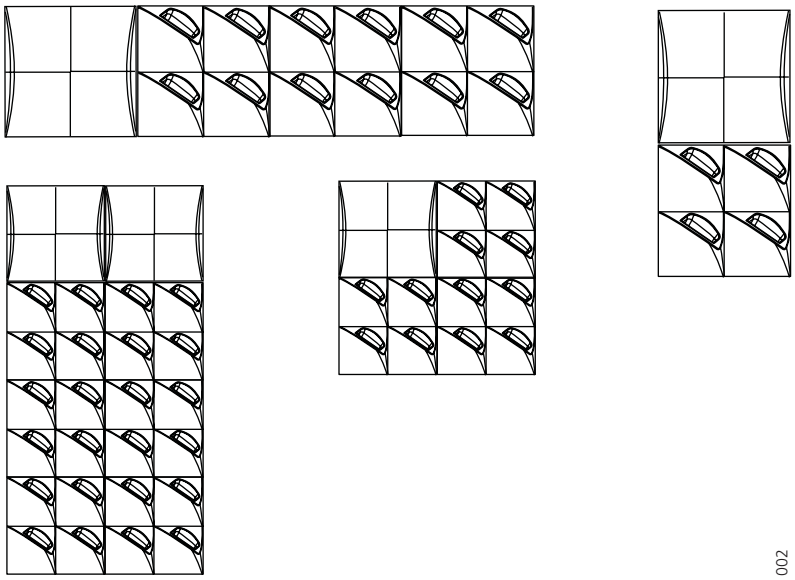

Figure 2. Four different ways to assemble the CR2 Charging Rack modules.

The Power Supply module can also be placed apart from the Charging Rack modules.

3.1 Mounting

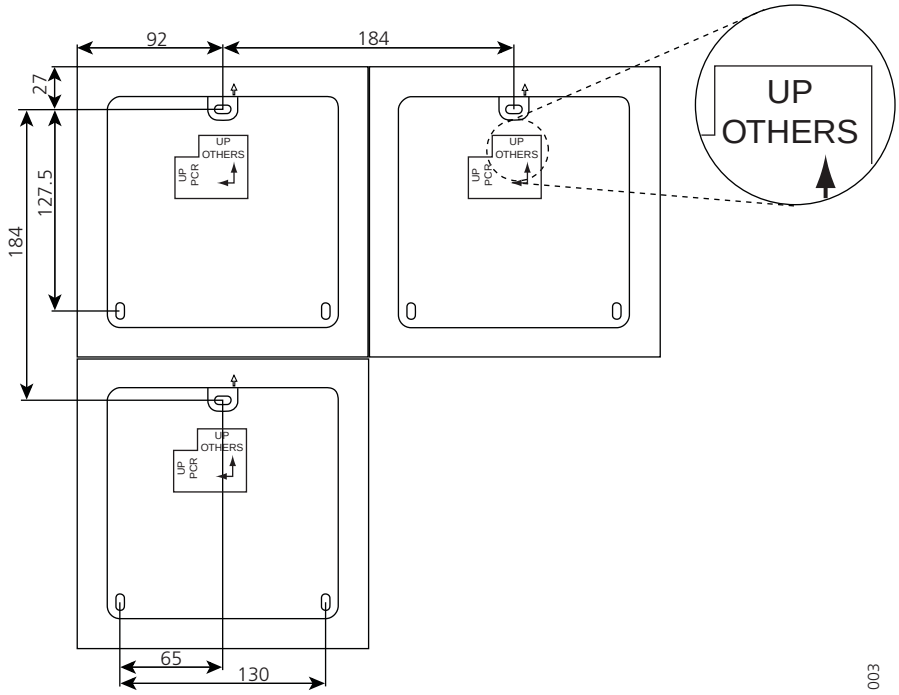

Figure 3. Mounting dimensions in mm. The modules should be mounted with the marking text, "UP OTHERS", upwards.

For wall fitting, preparation can be done in two ways:

- Measure and mark out the drill holes by using the dimensions in figure 3. Drill and fasten the modules on the wall with three screws.

  or

- Remove the covers, see 3.2 *Removing Covers* on page 5 and mount together some of the modules, see 3.3 *Mounting Units Together* on page 6. Hold the mounted modules up against the wall and mark the location of the drill holes. Drill and fasten the modules on the wall with three screws.

Tip:

When you are planning the location of the modules, start to mount them in a height that makes it easy to reach the cordless handsets and to read the cordless handset's display.

3.2 Removing Covers

Power Supply Module

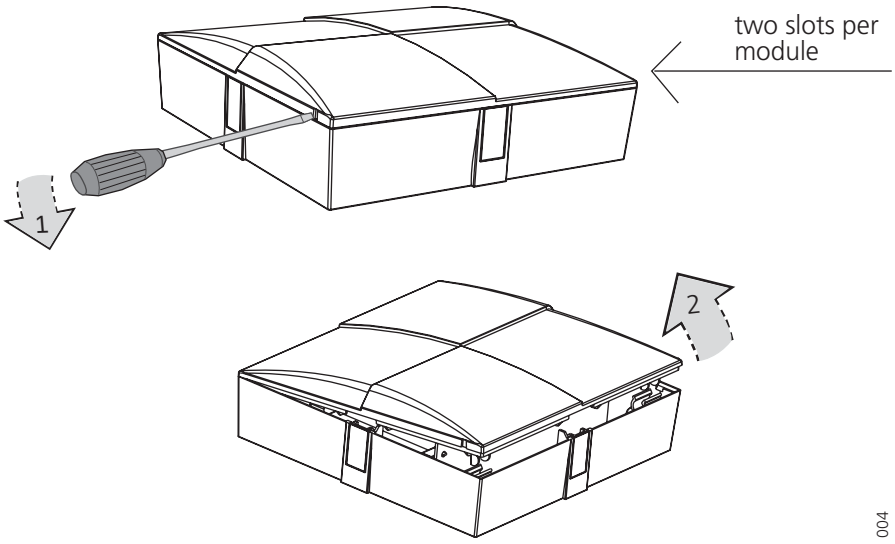

Figure 4. Removing the cover from the Power Supply module.

1 Put a screwdriver onto the slots and slightly bend the cover upwards (1).

2 Lift up the cover in the direction of the arrow (2).

CR2 Charging Rack Module

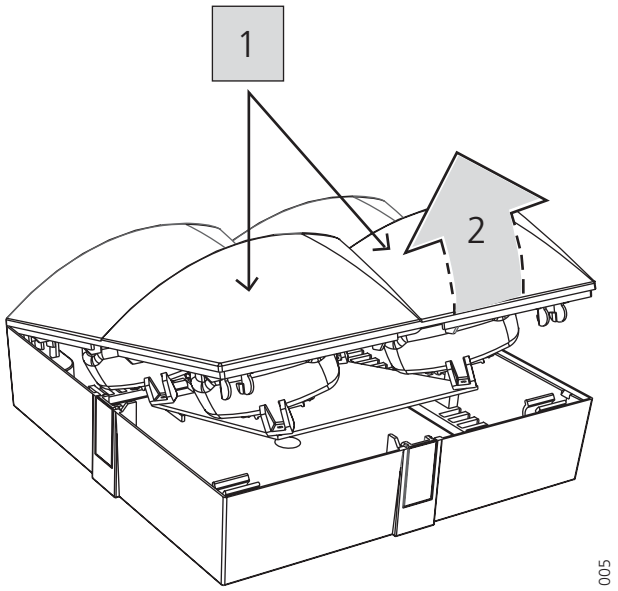

Figure 5. Removing the cover from the Charging Rack module.

Note: Use the charging slots to open the cover.

1 Grasp one of the two lower charging slots (1) and remove the cover by pulling it up in the direction of the arrow (2).

3.3 Mounting Units Together

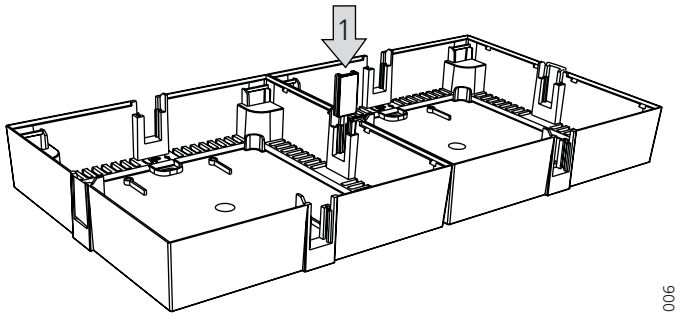

Figure 6. Mounting units together.

1 Fasten the two adjacent modules together with two rectangular assembly parts, which are provided in the parts bag. Place two covers in the adjoining slot (1).

Note: The modules must be placed with the marking text, "UP", upwards. See *figure 3* on page 4.

2 Fasten each module on the wall with three screws, see figure 3 on page 4.

3 Mount two clips (which are provided in the parts bag) in each module (2).

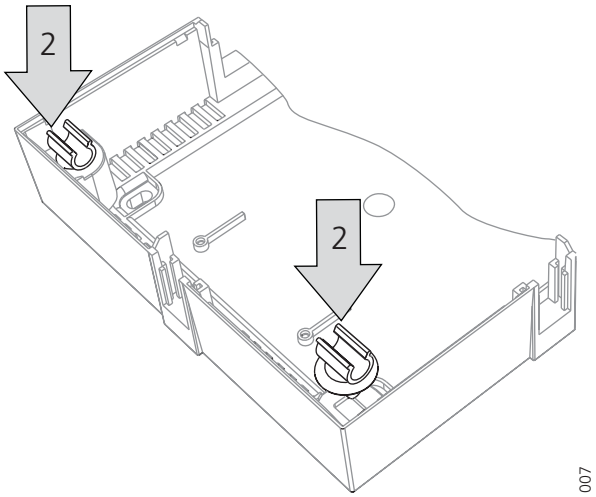

Figure 7. Mounting of clips.

4 Mount rectangular covers (which are provided in the parts bag) at the openings where there are no adjacent modules (3), see figure 8 below.

5 Fasten the cover's angled hooks on the holders (4).

6 Snap on the cover (5).

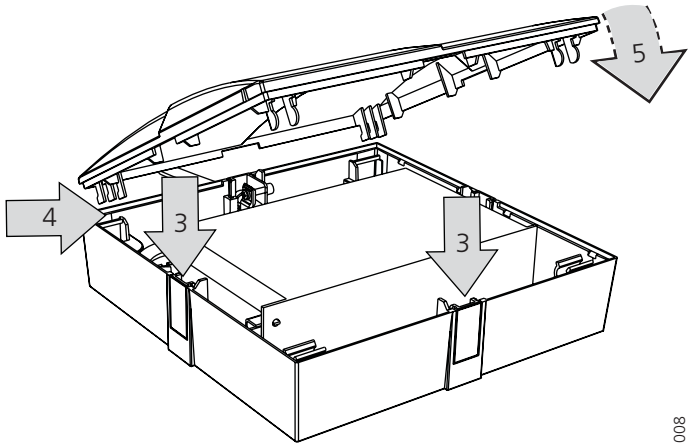

Figure 8. Mounting of rectangular covers and replacing the covers.

4 Connection of Power Supply

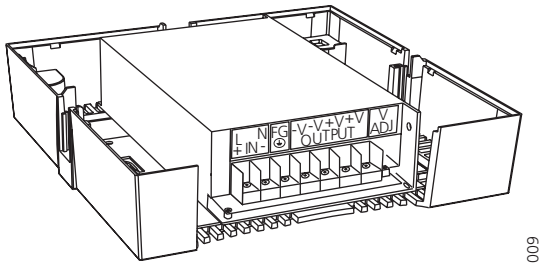

Figure 9. Power Supply module.

IMPORTANT: The Power Supply module connects to 100 - 250 V AC. When working with the units the mains power supply cable must always be disconnected. For safety the covers must always be mounted after an installation. The voltage safety cover has to be mounted on top of the voltage connector in the Power Supply module to prevent hazardous situations, like electric shock, see figure 13 on page 9.

4.1 Connection of Mains Power Supply Cable (AC)

1 Unscrew the voltage safety cover.

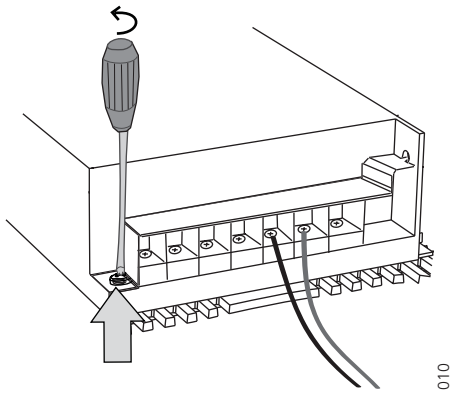

Figure 10. Removing the voltage safety cover.

2 Run the mains power supply cable through the cable support holder which is provided in the parts bag.

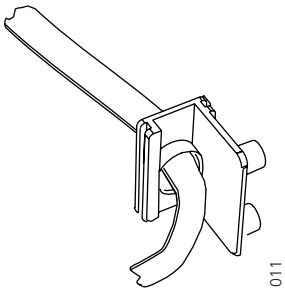

Figure 11. Mains power supply cable with cable support holder

3 Cut and strip the mains power supply cables.

4 Connect the mains power supply cable onto the indicated positions on the connector, see figure 12.

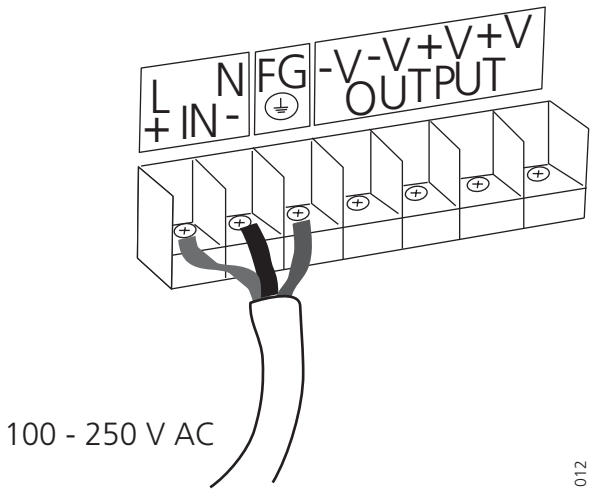

Figure 12. The mains power supply connection.

IMPORTANT: To prevent hazardous situations like electric shock, the voltage safety cover must always be mounted.

5 Mount the voltage safety cover on its position (1), fasten it with one screw (2), see figure 13.

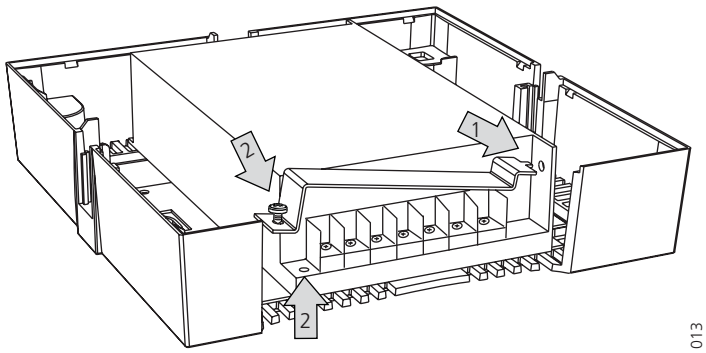

Figure 13. Mounting of the voltage safety cover.

4.2 Wiring Run

Mains Power Supply Cable (AC)

Note: To avoid cable break, make sure that the cable is not tight around the sharp edge of the power supply.

1 Mount the cable support holder at the opening, marking, "UP", on the Power Supply module, or opposite side depending on where the wall socket is placed and how the modules are fitted together (1).

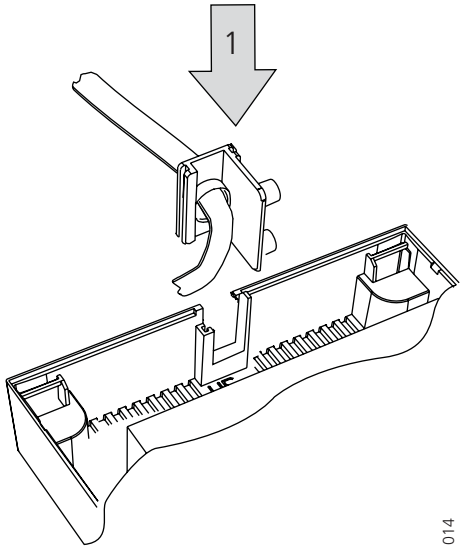

Figure 14. Mounting of the cable support holder.

2 Secure the mains power supply cable with two screws (2), which are provided in the parts bag.

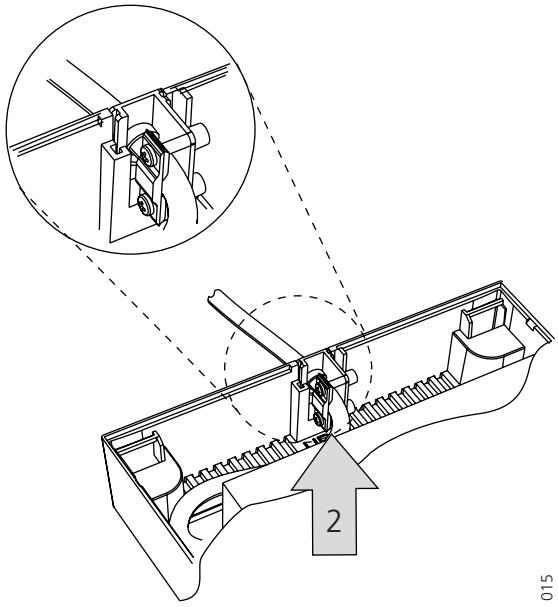

Figure 15. Securing the mains power supply cable.

Supply Voltage Cable (DC)

The +5 V DC supply voltage cable is pre<-assembled.

1 If possible run the +5 V DC supply voltage cable around the cable support, to avoid cable break. See figure 16.

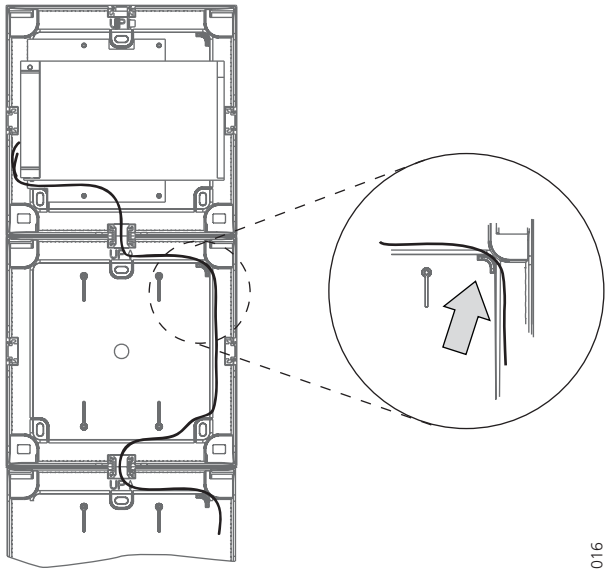

Figure 16. +5 V DC supply voltage cable support.

4.3 Connection of Supply Voltage Connector

IMPORTANT: Power Supply for CR24 is the only power supply that can be used together with CR2 Charging Rack for Handsets module.

Note: J3 is a polarised connector. If the connector is inserted the wrong way the charging will not work.

1 Connect the +5 V DC supply voltage connector to J3.

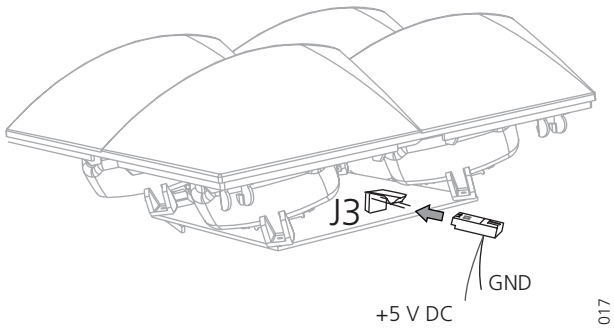

Figure 17. Position of connector J3.

2 Mount the covers, see figure 8 on page 7.

5 Installation Test

IMPORTANT: To ensure that the Power Supply is grounded after installation, measure between the power supplies metal shield cover and an extraneous ground. The Power Supply unit can otherwise be live.

1 Connect the mains power supply cable to the wall socket.

2 Check that each charging slot starts charging by putting a cordless handset in each charging slot. A beep indicates when the charging starts, and the battery icon in the display of the cordless handset will show when it is fully charged.

6 Board Description

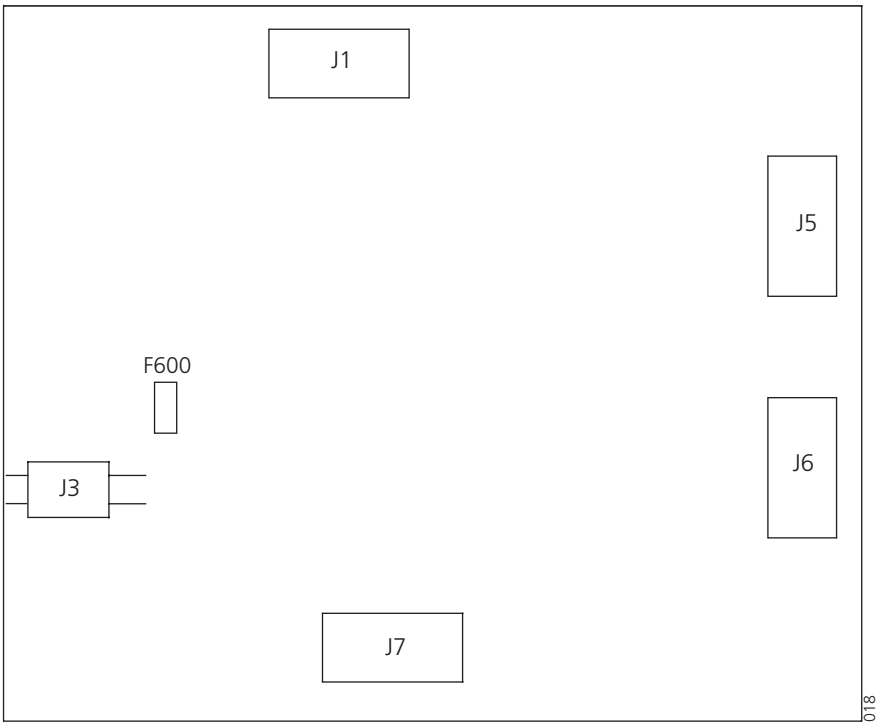

Figure 18. CR2 circuit board.

Connectors

J1	Connection between charging slot and charging channel 0
J3	+5 V DC supply voltage
J5	Connection between charging slot and charging channel 1
J6	Connection between charging slot and charging channel 2
J7	Connection between charging slot and charging channel 3

Fuse

F600	5 A fuse for protection against risk of fire.

7 Installation of Spare Battery Adapter

Note: The Spare Battery Adapter is used for 9d24 batteries only. For i75 batteries the PBC Battery Pack Charger module is used.

To charge spare batteries for 9d24 Cordless Handset, an adapter has to be fitted into the slots.

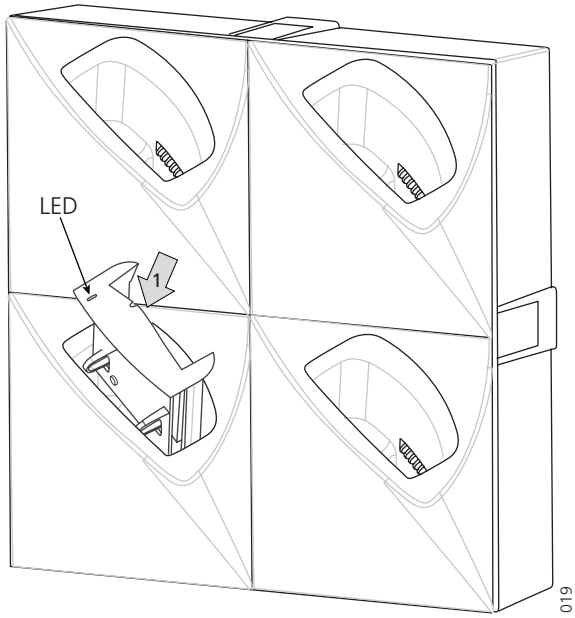

Figure 19. Adapter fitting for charging spare batteries.

1 Pull off the protecting film from the double sided sticky tape.

2 Snap the adapter into position in the slot (1) as shown in figure 19.

Tip: Plan how to place the spare battery adapters carefully, as the double sided tape can make it hard to remove the adapters later on.

LED indications

OFF	No charging, battery not inserted correctly.
Flashing	Charging of battery.
ON	Battery fully charged.

7.1 Installation Test

1 Check that the charging slot with the spare battery adapter is working.

Put a battery in the charging slot. If the LED starts flashing, the spare battery adapter is working.

Document History

For details, see change bars in the document.s

Version	Date	Description
Ver. A	2006-04-24	First version.
Ver. B	2006-08-09	Temperature limitations for the CR24 Power Supply (page 3). Mounting instruction for the CR24 Power Supply (page 3).